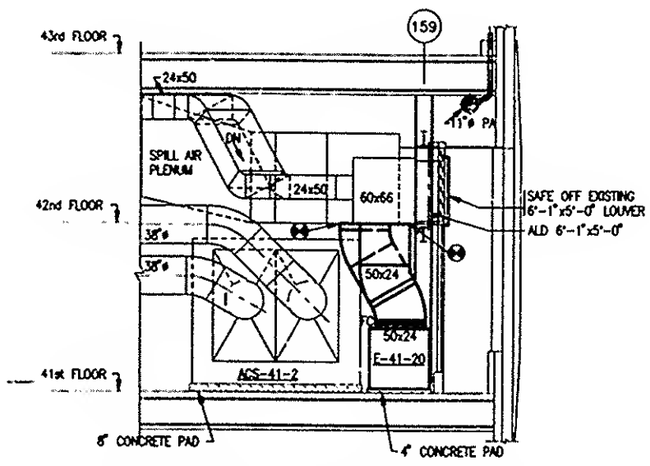

SECTION – INSTALLATION C M-8

SCALE IN FEET

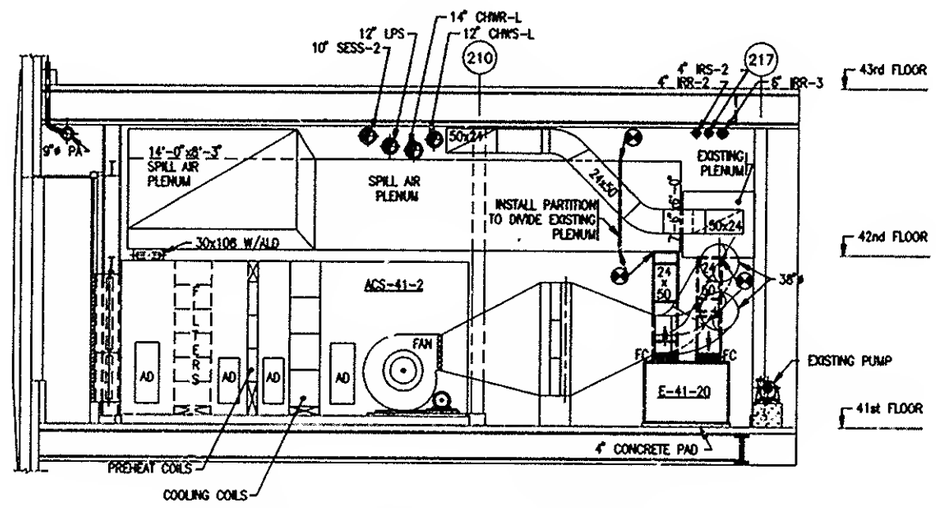

SECTION – INSTALLATION D M-8

SCALE IN FEET

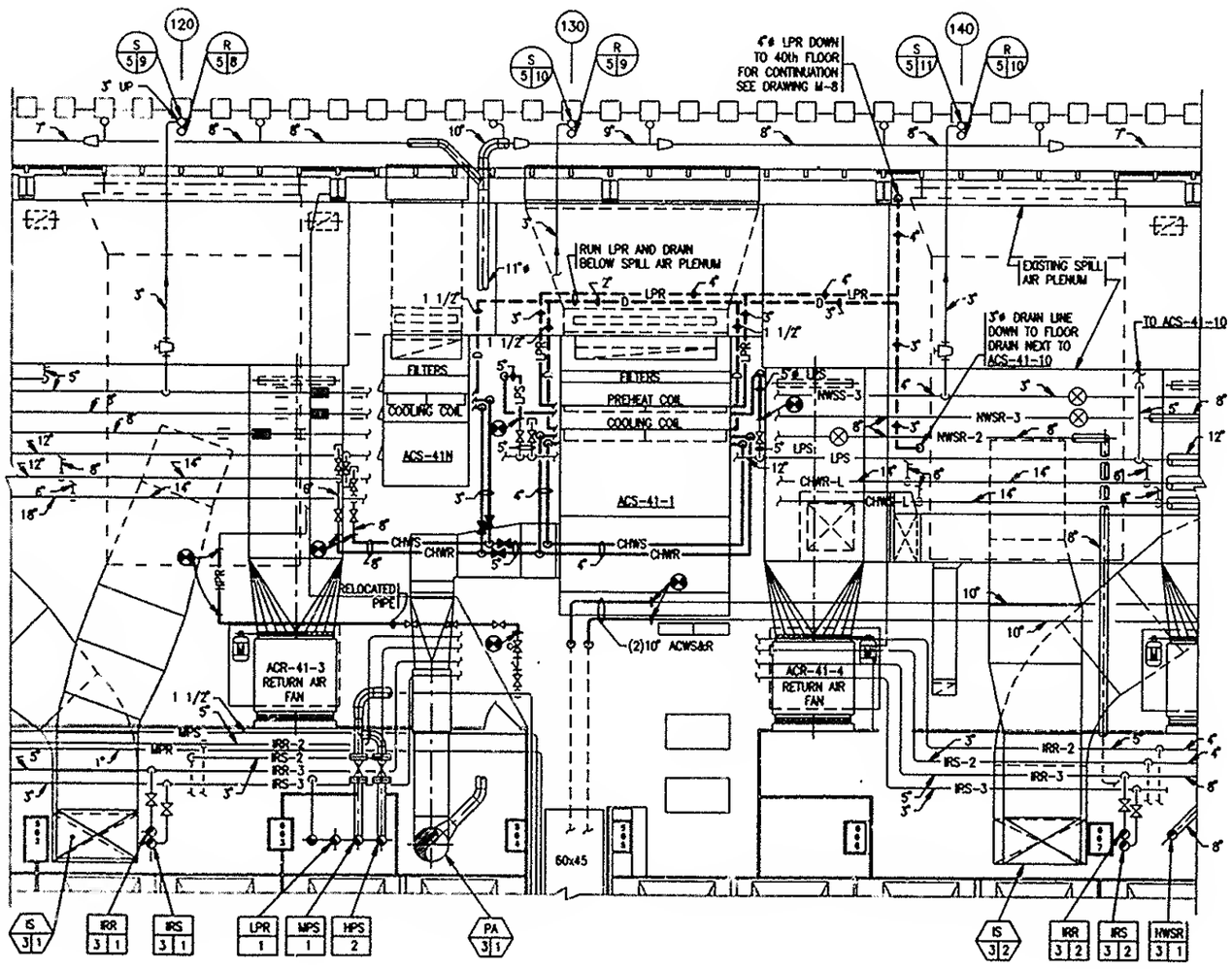

PIPING PART PLAN – 42nd FLOOR MER – INSTALLATION

SCALE IN FEET

FILE NAME 4-4.MTO SCALE FACTOR 1=8"